ROTARY VALVE
S80 001 917

Description

Our rotary valves enable the control of up to six distinct circuits from a single input port. The operation of the valve involves pressing and rotating the knob; the flow is then interrupted to all output ports until the desired position is engaged.

Once a new output port is selected, the valve vents the air inside to atmosphere.

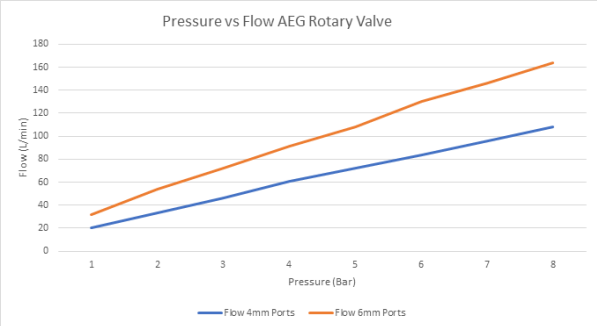

Pressure (bar)	Flow (L/min)	
	4mm	6mm
1	20	32
2	33	54
3	46	72
4	61	91
5	72	108
6	84	130
7	96	146
8	108	165

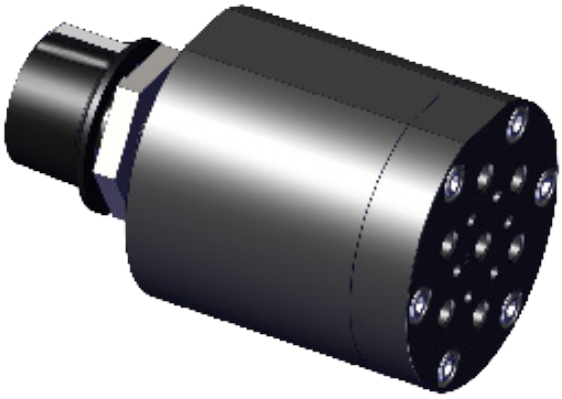

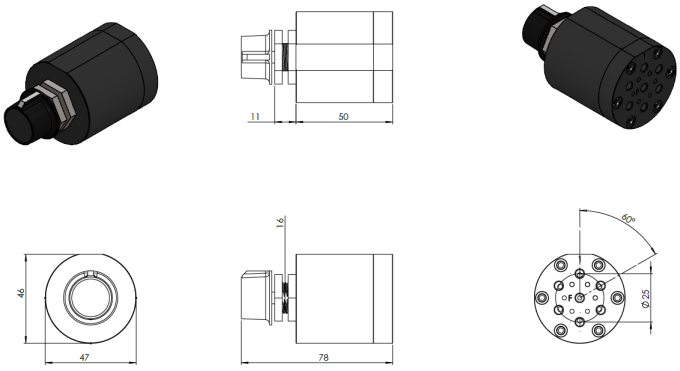

Features

- Six positions
- Common inlet
- Hard anodised for wear and corrosion resistance
- Panel/enclosure mounted
- M5 ports
- Rotary actuation
- Operating Pressure 2 - 8 bar
- Panel Mount Size - 15mm

Materials

- Aluminium - hard/clear anodised
- Stainless Steel
- Nickel Plated Brass
- Iglidur®
- Brass
- POM
- PBT
- PP
- Nitrile
- ABS

www.aegroup.uk.com Phone: +44 (0)1342 826488 Fax: +44 (0)1342 826489 Email: info@aegroup.uk.com