NOTES:

1. MAXIMUM ALLOWABLE WORKING TEMPERATURE : 80° C (176° F) [COMPRESSED AIR].

2. MAXIMUM ALLOWABLE WORKING PRESSURE: 17.2 BARG (250 PSIG).

3. MOISTURE SEPARATOR MUST COMPLY WITH PRESSURE EQUIPMENT DIRECTIVE PED (2014/68/EU) - ART 4.3 (3/8" - 1 1/2")
- CAT I (2" - 3")

REVISIONS						
ZONE	REV	ECN	DESCRIPTION	DATE	DRAWN	APPROVED
	A	1396906	ORIGINAL RELEASE	2020AUG12	SUJIN	J.JAKOP

Model	Part Number (CCN)	Connection size	m3/min	kg	A (mm)	B (mm)	C (mm)	D (mm)	E (inch)	F (inch)
X005 3/8"	47700883001	3/8" BSPT	0.5	0.6	235	76	64	20	1/2" BSPT	1/4" BSPT
X007 1/2"	47700884001	1/2" BSPT	0.66	0.6	235	76	64	20	1/2" BSPT	1/4" BSPT
X018 3/4"	47700885001	3/4" BSPT	1.8	1.2	291	98	83	26	3/4" BSPT	1/4" BSPT
X040 1"	47700886001	1" BSPT	4	2.2	329	129	113	36	1" BSPT	1/4" BSPT
X085 11/2"	47700887001	1 1/2" BSPT	8.5	2.06	329	129	113	36	1 1/2" BSPT	1/4" BSPT
X170 2"	47700888001	2" BSPT	17	5.12	529	170	155	44	2" BSPT	1/4" BSPT
X380 3"	47700889001	3" BSPT	38	20	605	205	180	61	3" BSPT	1/4" BSPT

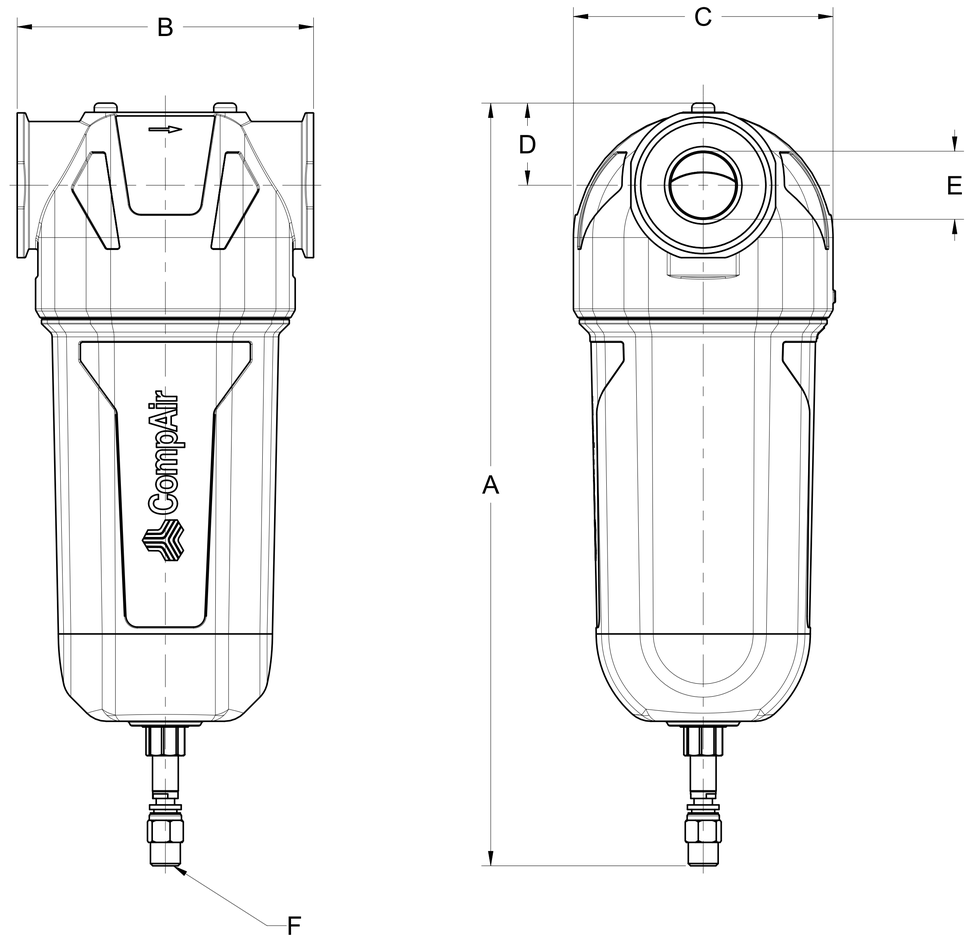

STANDARD TOLERANCES

ALL DIMENSIONS ARE IN MILLIMETERS [INCHES (IF SHOWN)]

UNSPECIFIED TOLERANCES:

WHOLE	:	± 3
ONE PLACE (.X)	:	± 0.5
TWO PLACE (.XX)	:	± 0.25
ANGLES (.X)	:	± 1°

Ingersoll-Rand Industrial Technologies

WARNING: THE EXPORT OR REEXPORT OF THIS DRAWING OR A PRODUCT PRODUCED BY THIS DRAWING IS SUBJECT TO U.S. EXPORT ADMINISTRATION REGULATIONS AND OTHER APPLICABLE GOVERNMENT RESTRICTIONS OR REGULATIONS.

PROPRIETARY NOTICE

THIS DRAWING CONTAINS CONFIDENTIAL AND TRADE SECRET INFORMATION, IS THE PROPERTY OF COMPAIR, AND IS GIVEN TO THE RECEIVER IN CONFIDENCE. THE RECEIVER BY RECEPTION AND RETENTION OF THE DRAWING ACCEPTS THE DRAWING IN CONFIDENCE AND AGREES THAT, EXCEPT AS AUTHORIZED IN WRITING BY COMPAIR. IT WILL (1) NOT USE THE DRAWING OR ANY COPY THEREOF OR THE CONFIDENTIAL OR TRADE SECRET INFORMATION THEREIN; (2) NOT COPY THE DRAWING; (3) NOT DISCLOSE TO OTHERS EITHER THE DRAWING OR THE CONFIDENTIAL OR TRADE SECRET INFORMATION THEREIN; AND (4) UPON COMPLETION OF THE NEED TO RETAIN THE DRAWING, OR UPON DEMAND, RETURN THE DRAWING, ALL COPIES THEREOF, AND ALL MATERIAL COPIED THEREFROM.

DO NOT SCALE DRAWING

DRAWING CONFORMS TO ASME Y14.5M - 1994

CAD GENERATED DRAWING, NO MANUAL REVISIONS ALLOWED

UNLESS OTHERWISE SPECIFIED:
- REMOVE ALL BURRS AND SHARP CORNERS
- WELD SYMBOLS TO BE IN ACCORDANCE WITH ANSI/AWS A2.4

COPYRIGHT @ 2020 CompAir ALL RIGHTS RESERVED

THIRD ANGLE PROJECTION

		DATE
DRAWN	SUJIN	2020AUG12
CHECKED	P.BLAZ	2020AUG12
APPROVED	J.JAKOP	2020AUG12

DRAWING TYPE: Detail Drawing

NOMENCLATURE

CompAir

NAME

X005 3/8"-X380 3"

SIZE	ESTIMATED WEIGHT (KG UNLESS OTHERWISE SPECIFIED)	PART NO.	REVISION
A1	0.0 kilogram	47699048001	A

SCALE	MODEL	
0.75	WS 1.0 BSPT AD	1 OF 1

UNLESS OTHERWISE SPECIFIED PRINTED DOCUMENT IS UNCONTROLLED