NOTES:

1. WORKING PARAMETERS
   MAXIMUM WORKING PRESSURE: 17 BARG (250 PSIG)
   MAXIMUM WORKING TEMPERATURE: 50° C (122° F)

2. FILTRATION GRADES:
   GRADE: D
   ACTIVATED CARBON FILTRATION
   OIL VAPOR AND HYDROCARBON ODOR REMOVAL,
   PROVIDING A MAXIMUM REMAINING OIL CONTENT
   OF <0.003 mg/m3 (<0.003 PPM) @ 21° C (70° F).
   (PRECEDE WITH GRADE C FILTER)

| REVISIONS | | | | | | |
|---|---|---|---|---|---|---|
| ZONE | REV | ECN | DESCRIPTION | DATE | DRAWN | APPROVED |
| | A | 1396906 | ORIGINAL RELEASE | 2020JUL30 | SUJIN | J.JAKOP |

| Model | Part Number (CCN) | Connection size | m3/m | SCFM | kg | lbs | A (mm) | B (mm) | C (mm) | D (mm) | E (inch) | F (inch) | G (mm) |
|---|---|---|---|---|---|---|---|---|---|---|---|---|---|
| CF005L3/8"D | 47698793001 | 3/8" | 0.5 | 18 | 0.55 | 1.2 | 222 | 76 | 64 | 20 | 3/8" BSPT | 1/2" BSPP | 157 |
| CF007L1/2"D | 47698794001 | 1/2" | 0.7 | 24 | 0.55 | 1.2 | 222 | 76 | 64 | 20 | 1/2" BSPT | 1/2" BSPP | 157 |
| CF013L3/4"D | 47698795001 | 3/4" | 1.3 | 44 | 1.07 | 2.4 | 274 | 98 | 83 | 26 | 3/4" BSPT | 1/2" BSPP | 203 |
| CF018L3/4"D | 47698796001 | 3/4" | 1.8 | 65 | 1.09 | 2.4 | 274 | 98 | 83 | 26 | 3/4" BSPT | 1/2" BSPP | 203 |
| CF025L1"D | 47698797001 | 1" | 2.5 | 88 | 2.06 | 4.5 | 313 | 129 | 113 | 36 | 1" BSPT | 1/2" BSPP | 232 |
| CF032L1"D | 47698798001 | 1" | 3.2 | 112 | 2.06 | 4.5 | 313 | 129 | 113 | 36 | 1" BSPT | 1/2" BSPP | 232 |
| CF038L1"D | 47698799001 | 1" | 3.8 | 135 | 2.06 | 4.5 | 313 | 129 | 113 | 36 | 1" BSPT | 1/2" BSPP | 232 |
| CF067L1 1/2"D | 47698800001 | 1 1/2" | 6.7 | 235 | 2.36 | 5.2 | 405 | 129 | 113 | 36 | 1 1/2" BSPT | 1/2" BSPP | 324 |
| CF082L1 1/2"D | 47698801001 | 1 1/2" | 8.2 | 288 | 2.36 | 5.2 | 405 | 129 | 113 | 36 | 1 1/2" BSPT | 1/2" BSPP | 324 |
| CF100L2"D | 47698802001 | 2" | 10 | 353 | 5.2 | 11.5 | 515 | 170 | 155 | 44 | 2" BSPT | 1/2" BSPP | 426 |
| CF0133L2"D | 47698803001 | 2" | 13.3 | 471 | 5.24 | 11.5 | 515 | 170 | 155 | 44 | 2" BSPT | 1/2" BSPP | 426 |
| CF0167L2"D | 47698804001 | 2" | 16.7 | 589 | 5.26 | 11.6 | 515 | 170 | 155 | 44 | 2" BSPT | 1/2" BSPP | 426 |
| CF0200L3"D | 47698805001 | 3" | 20 | 706 | 9.31 | 20.5 | 594 | 205 | 180 | 61 | 3" BSPT | 1/2" BSPP | 488 |
| CF0260L3"D | 47698806001 | 3" | 26 | 918 | 10.69 | 23.6 | 694 | 205 | 180 | 61 | 3" BSPT | 1/2" BSPP | 588 |
| CF0305L3"D | 47698807001 | 3" | 30.5 | 1077 | 10.69 | 23.6 | 694 | 205 | 180 | 61 | 3" BSPT | 1/2" BSPP | 588 |
| CF0383L3"D | 47698808001 | 3" | 38.3 | 1354 | 13.7 | 30.2 | 926 | 205 | 180 | 61 | 3" BSPT | 1/2" BSPP | 820 |
| CF0450L3"D | 47698809001 | 3" | 45 | 1589 | 13.7 | 30.2 | 926 | 205 | 180 | 61 | 3" BSPT | 1/2" BSPP | 820 |

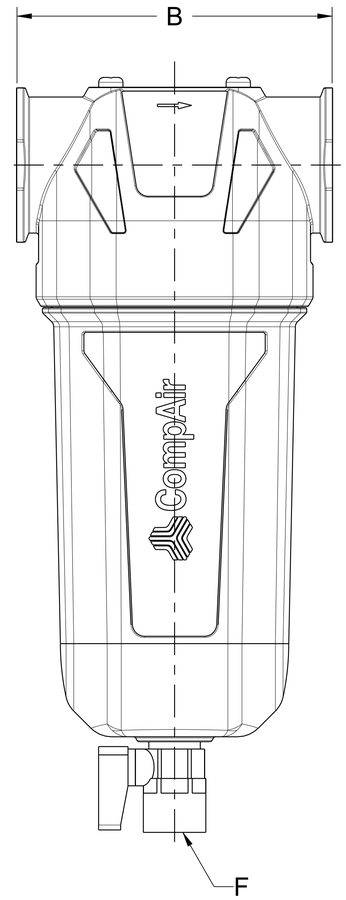


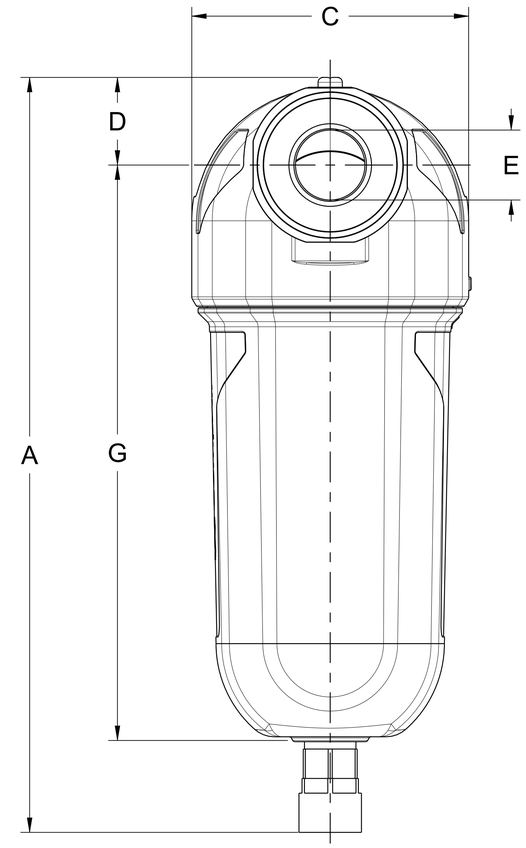


**SOURCE CONTROL DRAWING**

| STANDARD TOLERANCES |
|---|
| ALL DIMENSIONS ARE IN MILLIMETERS [INCHES (IF SHOWN)] |
| UNSPECIFIED TOLERANCES: |
| WHOLE : ± 2 |
| ONE PLACE (.X) : ± 0.5 |
| TWO PLACE (.XX) : ± 0.25 |
| ANGLES (.X) : ± 1° |


WARNING: THE EXPORT OR REEXPORT OF THIS DRAWING OR A PRODUCT PRODUCED BY THIS DRAWING IS SUBJECT TO U.S. EXPORT ADMINISTRATION REGULATIONS AND OTHER APPLICABLE GOVERNMENT RESTRICTIONS OR REGULATIONS.

PROPRIETARY NOTICE

THIS DRAWING CONTAINS CONFIDENTIAL AND TRADE SECRET INFORMATION, IS THE PROPERTY OF COMPAIR, AND IS GIVEN TO THE RECEIVER IN CONFIDENCE. THE RECEIVER BY RECEPTION AND RETENTION OF THE DRAWING ACCEPTS THE DRAWING IN CONFIDENCE AND AGREES THAT, EXCEPT AS AUTHORIZED IN WRITING BY COMPAIR. IT WILL (1) NOT USE THE DRAWING OR ANY COPY THEREOF OR THE CONFIDENTIAL OR TRADE SECRET INFORMATION THEREIN; (2) NOT COPY THE DRAWING; (3) NOT DISCLOSE TO OTHERS EITHER THE DRAWING OR THE CONFIDENTIAL OR TRADE SECRET INFORMATION THEREIN; AND (4) UPON COMPLETION OF THE NEED TO RETAIN THE DRAWING, OR UPON DEMAND, RETURN THE DRAWING, ALL COPIES THEREOF, AND ALL MATERIAL COPIED THEREFROM.


DO NOT SCALE DRAWING

DRAWING CONFORMS TO ASME Y14.5M - 1994

CAD GENERATED DRAWING, NO MANUAL REVISIONS ALLOWED

UNLESS OTHERWISE SPECIFIED:
- REMOVE ALL BURRS AND SHARP CORNERS
- WELD SYMBOLS TO BE IN ACCORDANCE WITH ANSI/AWS A2.4


COPYRIGHT @ 2020 CompAir
ALL RIGHTS RESERVED


THIRD ANGLE PROJECTION

| | | |
|---|---|---|
| DRAWN | SUJIN | DATE 2020JUL30 |
| CHECKED | P.BLAZ | DATE 2020JUL30 |
| APPROVED | J.JAKOP | DATE 2020JUL30 |

DRAWING TYPE: Detail Drawing
NOMENCLATURE

CompAir

NAME: **CF005L3/8"D-CF0450L3"D**

| SIZE | ESTIMATED WEIGHT (KG UNLESS OTHERWISE SPECIFIED) | PART NO. | REVISION |
|---|---|---|---|
| A1 | 0.0 kilogram | 47699022001 | A |

SCALE 0.50 | MODEL METRIC | 1 OF 1