NOTES:

1. WORKING PARAMETERS
   MAXIMUM WORKING PRESSURE: 17 BARG (250 PSIG)
   MAXIMUM WORKING TEMPERATURE: 50° C (122° F)

2. FILTRATION GRADES:
   GRADE: D
   ACTIVATED CARBON FILTRATION
   OIL VAPOR AND HYDROCARBON ODOR REMOVAL,
   PROVIDING A MAXIMUM REMAINING OIL CONTENT
   OF <0.003 mg/m3 (<0.003 PPM) @ 21° C (70° F).
   (PRECEDE WITH GRADE C FILTER)

REVISIONS						
ZONE	REV	ECN	DESCRIPTION	DATE	DRAWN	APPROVED
	A	1396906	ORIGINAL RELEASE	2020JUL30	SUJIN	J.JAKOP

Model	Part Number (CCN)	Connection size	m3/m	SCFM	kg	lbs	A (mm)	B (mm)	C (mm)	D (mm)	E (inch)	F (inch)	G (mm)
CF005L3/8"D	47698793001	3/8"	0.5	18	0.55	1.2	222	76	64	20	3/8" BSPT	1/2" BSPP	157
CF007L1/2"D	47698794001	1/2"	0.7	24	0.55	1.2	222	76	64	20	1/2" BSPT	1/2" BSPP	157
CF013L3/4"D	47698795001	3/4"	1.3	44	1.07	2.4	274	98	83	26	3/4" BSPT	1/2" BSPP	203
CF018L3/4"D	47698796001	3/4"	1.8	65	1.09	2.4	274	98	83	26	3/4" BSPT	1/2" BSPP	203
CF025L1"D	47698797001	1"	2.5	88	2.06	4.5	313	129	113	36	1" BSPT	1/2" BSPP	232
CF032L1"D	47698798001	1"	3.2	112	2.06	4.5	313	129	113	36	1" BSPT	1/2" BSPP	232
CF038L1"D	47698799001	1"	3.8	135	2.06	4.5	313	129	113	36	1" BSPT	1/2" BSPP	232
CF067L1 1/2"D	47698800001	1 1/2"	6.7	235	2.36	5.2	405	129	113	36	1 1/2" BSPT	1/2" BSPP	324
CF082L1 1/2"D	47698801001	1 1/2"	8.2	288	2.36	5.2	405	129	113	36	1 1/2" BSPT	1/2" BSPP	324
CF100L2"D	47698802001	2"	10	353	5.2	11.5	515	170	155	44	2" BSPT	1/2" BSPP	426
CF0133L2"D	47698803001	2"	13.3	471	5.24	11.5	515	170	155	44	2" BSPT	1/2" BSPP	426
CF0167L2"D	47698804001	2"	16.7	589	5.26	11.6	515	170	155	44	2" BSPT	1/2" BSPP	426
CF0200L3"D	47698805001	3"	20	706	9.31	20.5	594	205	180	61	3" BSPT	1/2" BSPP	488
CF0260L3"D	47698806001	3"	26	918	10.69	23.6	694	205	180	61	3" BSPT	1/2" BSPP	588
CF0305L3"D	47698807001	3"	30.5	1077	10.69	23.6	694	205	180	61	3" BSPT	1/2" BSPP	588
CF0383L3"D	47698808001	3"	38.3	1354	13.7	30.2	926	205	180	61	3" BSPT	1/2" BSPP	820
CF0450L3"D	47698809001	3"	45	1589	13.7	30.2	926	205	180	61	3" BSPT	1/2" BSPP	820

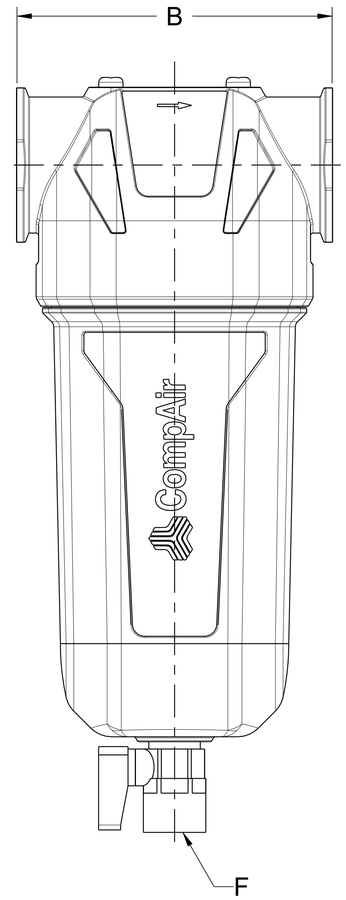

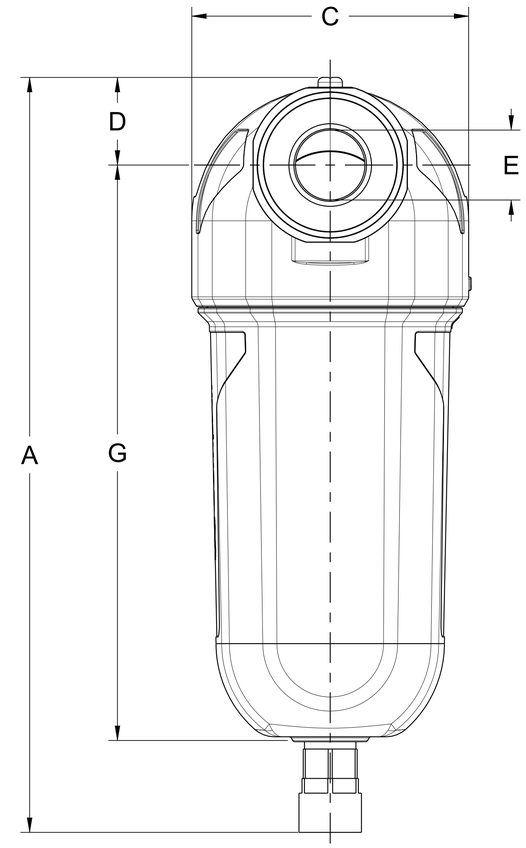

SOURCE CONTROL DRAWING

STANDARD TOLERANCES
ALL DIMENSIONS ARE IN MILLIMETERS [INCHES (IF SHOWN)]
UNSPECIFIED TOLERANCES:
WHOLE : ± 2
ONE PLACE (.X) : ± 0.5
TWO PLACE (.XX) : ± 0.25
ANGLES (.X) : ± 1°

WARNING: THE EXPORT OR REEXPORT OF THIS DRAWING OR A PRODUCT PRODUCED BY THIS DRAWING IS SUBJECT TO U.S. EXPORT ADMINISTRATION REGULATIONS AND OTHER APPLICABLE GOVERNMENT RESTRICTIONS OR REGULATIONS.

PROPRIETARY NOTICE

THIS DRAWING CONTAINS CONFIDENTIAL AND TRADE SECRET INFORMATION, IS THE PROPERTY OF COMPAIR, AND IS GIVEN TO THE RECEIVER IN CONFIDENCE. THE RECEIVER BY RECEPTION AND RETENTION OF THE DRAWING ACCEPTS THE DRAWING IN CONFIDENCE AND AGREES THAT, EXCEPT AS AUTHORIZED IN WRITING BY COMPAIR. IT WILL (1) NOT USE THE DRAWING OR ANY COPY THEREOF OR THE CONFIDENTIAL OR TRADE SECRET INFORMATION THEREIN; (2) NOT COPY THE DRAWING; (3) NOT DISCLOSE TO OTHERS EITHER THE DRAWING OR THE CONFIDENTIAL OR TRADE SECRET INFORMATION THEREIN; AND (4) UPON COMPLETION OF THE NEED TO RETAIN THE DRAWING, OR UPON DEMAND, RETURN THE DRAWING, ALL COPIES THEREOF, AND ALL MATERIAL COPIED THEREFROM.

DO NOT SCALE DRAWING

DRAWING CONFORMS TO ASME Y14.5M - 1994

CAD GENERATED DRAWING, NO MANUAL REVISIONS ALLOWED

UNLESS OTHERWISE SPECIFIED:
- REMOVE ALL BURRS AND SHARP CORNERS
- WELD SYMBOLS TO BE IN ACCORDANCE WITH ANSI/AWS A2.4

COPYRIGHT @ 2020 CompAir
ALL RIGHTS RESERVED

THIRD ANGLE PROJECTION

DRAWN	SUJIN	DATE 2020JUL30
CHECKED	P.BLAZ	DATE 2020JUL30
APPROVED	J.JAKOP	DATE 2020JUL30

DRAWING TYPE: Detail Drawing
NOMENCLATURE

CompAir

NAME: **CF005L3/8"D-CF0450L3"D**

SIZE	ESTIMATED WEIGHT (KG UNLESS OTHERWISE SPECIFIED)	PART NO.	REVISION
A1	0.0 kilogram	47699022001	A

SCALE 0.50 | MODEL METRIC | 1 OF 1