NOTES:
1. WORKING PARAMETERS
   MAXIMUM WORKING PRESSURE: 16 BARG (232 PSIG)
   MAXIMUM WORKING TEMPERATURE: 80° C (176° F)

2. FILTRATION GRADE:
   GRADE: C
   HIGH EFFICIENCY OIL REMOVAL FILTRATION
   PARTICLE REMOVAL DOWN TO 0.01 MICRON
   INCLUDING WATER AND OIL AEROSOLS, PROVIDING
   A MAXIMUM REMAINING OIL AEROSOL CONTENT OF
   0.01 mg/m3 (0.01 PPM) @ 21° C (60° F).
   (PRECEDE WITH GRADE B FILTER)

ELECTRONIC NO LOSS DRAIN

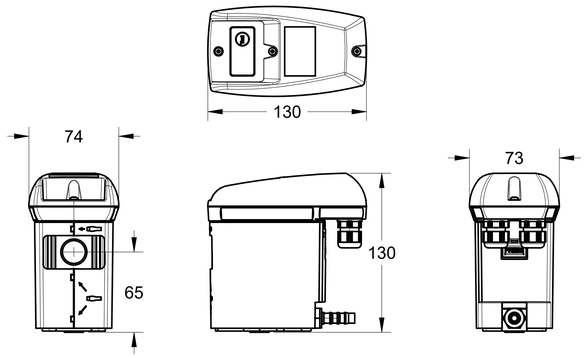

REVISIONS						
ZONE	REV	ECN	DESCRIPTION	DATE	DRAWN	APPROVED
	A	1396906	ORIGINAL RELEASE	2020AUG10	SUJIN	J.JAKOP

Model	Part Number (CCN)	Connection size	m3/min	SCFM	kg	lbs	A (mm)	B (mm)	C (mm)	D (mm)	E (mm)
Flange Filters with Float Drain											
CF0466LFC	47698849001	DN100 PN40	46.7	1656.8	125.0	275.0	1183	405	484	255	197
CF0700LFC	47698850001	DN125 PN40	70.0	2485.2	196.0	431.2	1185	520	630	284	208
CF0950LFC	47698851001	DN150 PN40	95.0	3372.8	210.0	462.0	1290	520	630	301	208
CF1250LFC	47698852001	DN150 PN40	125.0	4437.9	264.0	580.8	1332	580	676	311	208
CF1550LFC	47698853001	DN150 PN40	155.0	5503.0	314.0	690.8	1375	640	723	324	208
CF1833LFC	47698854001	DN200 PN40	183.3	6508.9	320.0	704.0	1385	640	724	340	208
CF2366LFC	47698855001	DN200 PN40	236.7	8402.4	530.0	1166.0	1562	840	885	441	208
CF3316LFC	47698856001	DN250 PN40	331.7	11775.1	670.0	1474.0	1605	910	1050	437	208
CF5166LFC	47698857001	DN300 PN40	516.7	18343.2	1083.0	2383.0	1588	1025	1200	531	224
Flange Filters with Electronic No Loss Drain											
CF0466LEE	47698873001	DN100 PN40	46.7	1656.8	125.0	275.0	1183	405	484	255	197
CF0700LEE	47698874001	DN125 PN40	70.0	2485.2	196.0	431.2	1185	520	630	284	208
CF0950LEE	47698875001	DN150 PN40	95.0	3372.8	210.0	462.0	1290	520	630	301	208
CF1250LEE	47698876001	DN150 PN40	125.0	4437.9	264.0	580.8	1332	580	676	311	208
CF1550LEE	47698877001	DN150 PN40	155.0	5503.0	314.0	690.8	1375	640	723	324	208
CF1833LEE	47698878001	DN200 PN40	183.3	6508.9	320.0	704.0	1385	640	724	340	208
CF2366LEE	47698879001	DN200 PN40	236.7	8402.4	530.0	1166.0	1562	840	885	441	208
CF3316LEE	47698880001	DN250 PN40	331.7	11775.1	670.0	1474.0	1605	910	1050	437	208
CF5166LEE	47698881001	DN300 PN40	516.7	18343.2	1083.0	2383.0	1588	1025	1200	531	224

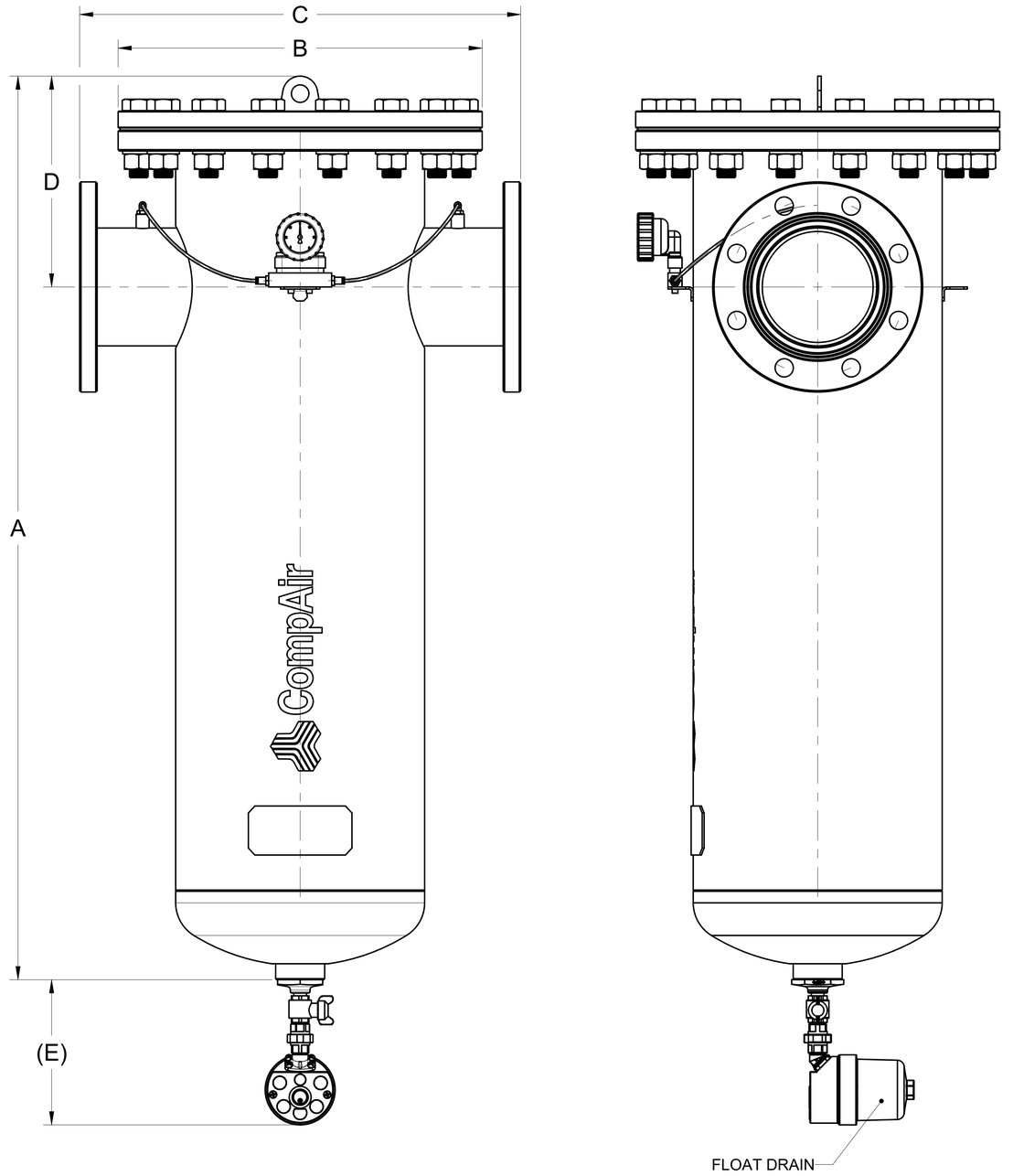

STANDARD TOLERANCES
ALL DIMENSIONS ARE IN MILLIMETERS [INCHES (IF SHOWN)]
UNSPECIFIED TOLERANCES: WHOLE : ± 8 ONE PLACE (.X) : ± 0.5 TWO PLACE (.XX) : ± 0.25 ANGLES (.X) : ± 1°
Ingersoll-Rand Industrial Technologies

WARNING: THE EXPORT OR REEXPORT OF THIS DRAWING OR A PRODUCT PRODUCED BY THIS DRAWING IS SUBJECT TO U.S. EXPORT ADMINISTRATION REGULATIONS AND OTHER APPLICABLE GOVERNMENT RESTRICTIONS OR REGULATIONS.

PROPRIETARY NOTICE

THIS DRAWING CONTAINS CONFIDENTIAL AND TRADE SECRET INFORMATION, IS THE PROPERTY OF COMPAIR, AND IS GIVEN TO THE RECEIVER IN CONFIDENCE. THE RECEIVER BY RECEPTION AND RETENTION OF THE DRAWING ACCEPTS THE DRAWING IN CONFIDENCE AND AGREES THAT, EXCEPT AS AUTHORIZED IN WRITING BY COMPAIR. IT WILL (1) NOT USE THE DRAWING OR ANY COPY THEREOF OR THE CONFIDENTIAL OR TRADE SECRET INFORMATION THEREIN; (2) NOT COPY THE DRAWING; (3) NOT DISCLOSE TO OTHERS EITHER THE DRAWING OR THE CONFIDENTIAL OR TRADE SECRET INFORMATION THEREIN; AND (4) UPON COMPLETION OF THE NEED TO RETAIN THE DRAWING, OR UPON DEMAND, RETURN THE DRAWING, ALL COPIES THEREOF, AND ALL MATERIAL COPIED THEREFROM.

DO NOT SCALE DRAWING
DRAWING CONFORMS TO ASME Y14.5M - 1994
CAD GENERATED DRAWING, NO MANUAL REVISIONS ALLOWED

UNLESS OTHERWISE SPECIFIED:
- REMOVE ALL BURRS AND SHARP CORNERS
- WELD SYMBOLS TO BE IN ACCORDANCE WITH ANSI/AWS A2.4

COPYRIGHT @ 2020 CompAir ALL RIGHTS RESERVED

THIRD ANGLE PROJECTION

DRAWN	SUJIN	DATE 2020AUG10
CHECKED	P.BLAZ	DATE 2020AUG10
APPROVED	J.JAKOP	DATE 2020AUG10

DRAWING TYPE: Detail Drawing
NOMENCLATURE

CompAir

NAME
CF0466LFC-CF5166LEE

SIZE	ESTIMATED WEIGHT (KG UNLESS OTHERWISE SPECIFIED)	PART NO.	REVISION
A1	0.0 kilogram	47699044001	A

SCALE 0.10 | MODEL | 1 OF 1