NOTES:
1. WORKING PARAMETERS
   MAXIMUM WORKING PRESSURE: 16 BARG (232 PSIG)
   MAXIMUM WORKING TEMPERATURE: 80° C (176° F)

2. FILTRATION GRADE:
   GRADE: C
   HIGH EFFICIENCY OIL REMOVAL FILTRATION
   PARTICLE REMOVAL DOWN TO 0.01 MICRON
   INCLUDING WATER AND OIL AEROSOLS, PROVIDING
   A MAXIMUM REMAINING OIL AEROSOL CONTENT OF
   0.01 mg/m3 (0.01 PPM) @ 21° C (60° F).
   (PRECEDE WITH GRADE B FILTER)

REVISIONS						
ZONE	REV	ECN	DESCRIPTION	DATE	DRAWN	APPROVED
	A	1396906	ORIGINAL RELEASE	2020AUG10	SUJIN	J.JAKOP

ELECTRONIC NO LOSS DRAIN

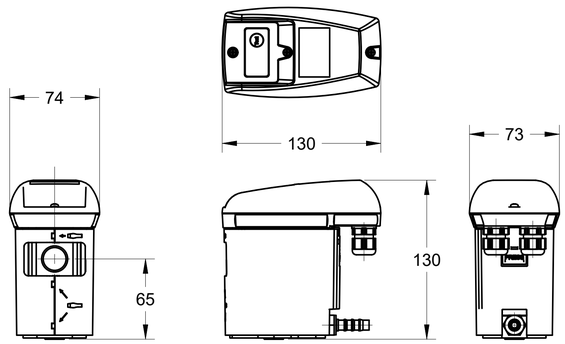

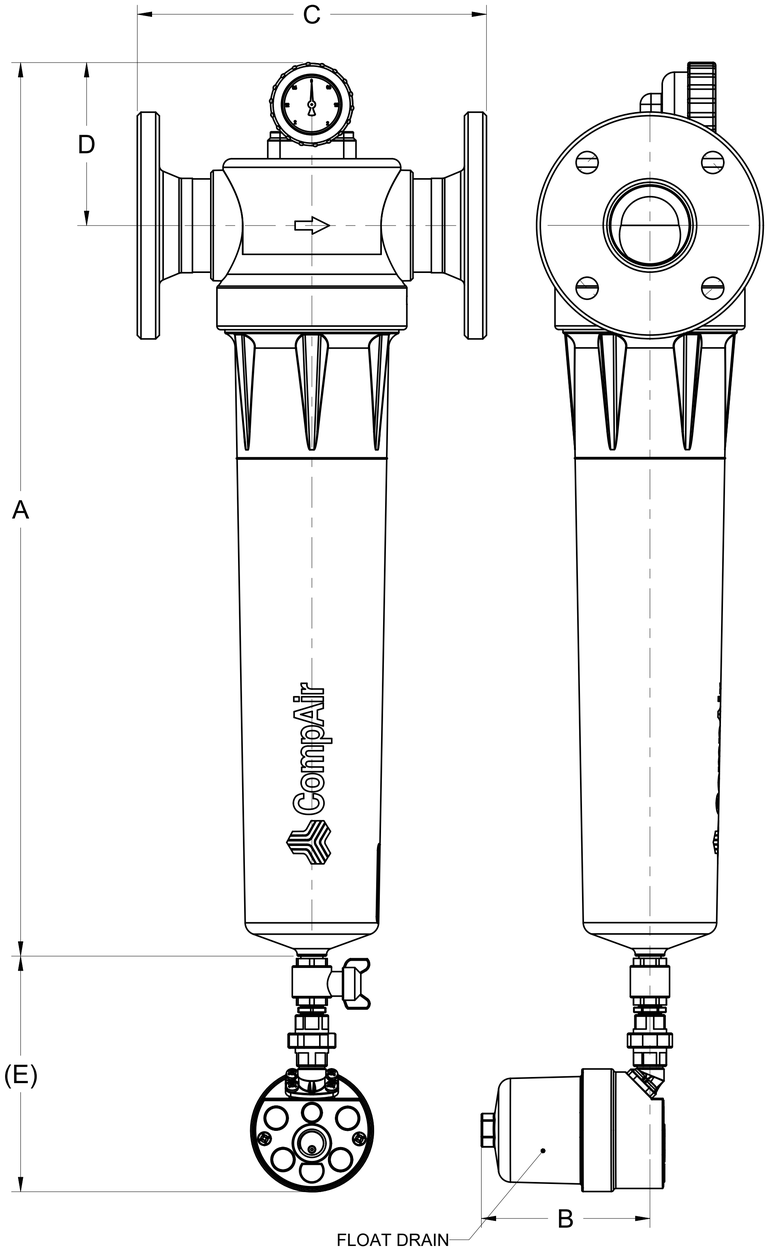

Model	Part Number (CCN)	Connection size	m3/min	SCFM	kg	lbs	A (mm)	B (mm)	C (mm)	D (mm)	E (mm)
Flange Filters with Float Drain											
CF0128LFC	47698846001	DN50 PN16	12.8	455.6	8	17.6	552	138	285	133	192
CF0220LFC	47698847001	DN65 PN16	22	781.1	11	24.2	729	138	285	133	192
CF0350LFC	47698848001	DN80 PN16	35	1242.6	16	35.2	918	138	340	140	192
Flange Filters with Electronic No Loss Drain											
CF0128LEE	47698870001	DN50 PN16	12.8	455.6	8	17.6	552	138	285	133	192
CF0220LEE	47698871001	DN65 PN16	22	781.1	11	24.2	729	138	285	133	192
CF0350LEE	47698872001	DN80 PN16	35	1242.6	16	35.2	918	138	340	140	192

STANDARD TOLERANCES

ALL DIMENSIONS ARE IN MILLIMETERS [INCHES (IF SHOWN)]

UNSPECIFIED TOLERANCES:

WHOLE : ± 4
ONE PLACE (.X) : ± 0.5
TWO PLACE (.XX) : ± 0.25
ANGLES (.X) : ± 1°

Ingersoll-Rand Industrial Technologies

WARNING: THE EXPORT OR REEXPORT OF THIS DRAWING OR A PRODUCT PRODUCED BY THIS DRAWING IS SUBJECT TO U.S. EXPORT ADMINISTRATION REGULATIONS AND OTHER APPLICABLE GOVERNMENT RESTRICTIONS OR REGULATIONS.

PROPRIETARY NOTICE

THIS DRAWING CONTAINS CONFIDENTIAL AND TRADE SECRET INFORMATION, IS THE PROPERTY OF COMPAIR, AND IS GIVEN TO THE RECEIVER IN CONFIDENCE. THE RECEIVER BY RECEPTION AND RETENTION OF THE DRAWING ACCEPTS THE DRAWING IN CONFIDENCE AND AGREES THAT, EXCEPT AS AUTHORIZED IN WRITING BY COMPAIR. IT WILL (1) NOT USE THE DRAWING OR ANY COPY THEREOF OR THE CONFIDENTIAL OR TRADE SECRET INFORMATION THEREIN; (2) NOT COPY THE DRAWING; (3) NOT DISCLOSE TO OTHERS EITHER THE DRAWING OR THE CONFIDENTIAL OR TRADE SECRET INFORMATION THEREIN; AND (4) UPON COMPLETION OF THE NEED TO RETAIN THE DRAWING, OR UPON DEMAND, RETURN THE DRAWING, ALL COPIES THEREOF, AND ALL MATERIAL COPIED THEREFROM.

DO NOT SCALE DRAWING

DRAWING CONFORMS TO ASME Y14.5M - 1994

CAD GENERATED DRAWING, NO MANUAL REVISIONS ALLOWED

UNLESS OTHERWISE SPECIFIED:
- REMOVE ALL BURRS AND SHARP CORNERS
- WELD SYMBOLS TO BE IN ACCORDANCE WITH ANSI/AWS A2.4

COPYRIGHT @ 2020 CompAir ALL RIGHTS RESERVED

THIRD ANGLE PROJECTION

DRAWN	SUJIN	2020AUG08
CHECKED	P.BLAZ	2020AUG08
APPROVED	J.JAKOP	2020AUG08

DRAWING TYPE: Detail Drawing
NOMENCLATURE

SOURCE CONTROL DRAWING

CompAir

NAME: **CF0128LFC-CF0350LEE**

SIZE	ESTIMATED WEIGHT (KG UNLESS OTHERWISE SPECIFIED)	PART NO.	REVISION
A1	0.0 kilogram	47699040001	A
SCALE 0.20	MODEL		1 OF 1