

PN 531 701
PN 531 121

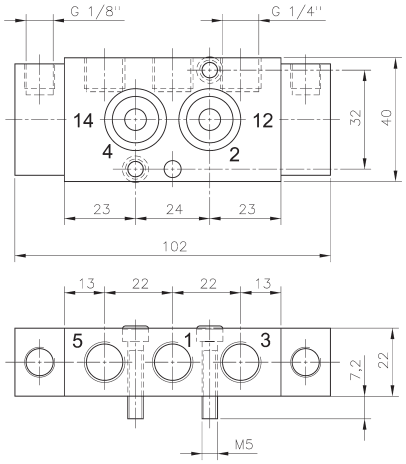

PN 531 701

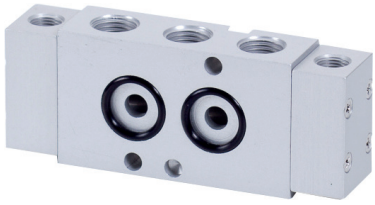

Pneumatically actuated 5/3-way spool valve with spring return to middle position, centre closed. Interface according to NAMUR-standard.

Port sizes type 701: 1, 3 and 5: G 1/4”
12 and 14: G 1/8”

Port sizes type121: 1, 3 and 5: G 1/2”
12 and 14: G 1/8”

Other 5/3-way versions (centre exhausted or pressurised) are available on request.

Delivery includes 1 pin, 2 screws, 2 O-rings.

NPT ported valves are available on request.

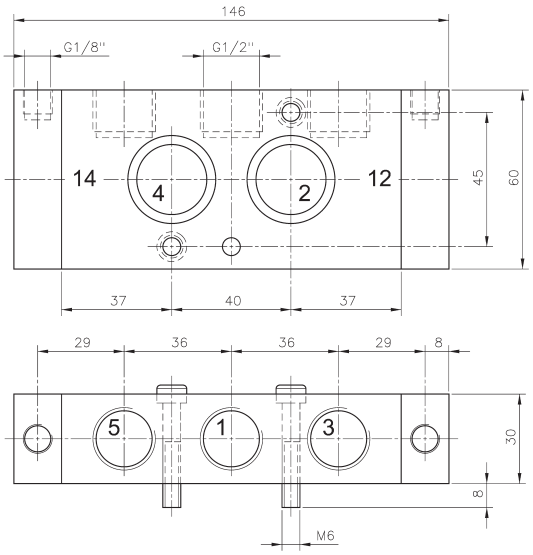

PN 531 121

Type	NAMUR	Port size	Air flow	Operating press.	Actuation press.	Weight
PN 531 701	1/4“	G 1/4“ - G 1/8“	1250 l/min	1 - 10 bar	3 - 10 bar	0,22 kg
PN 531 121	1/2“	G 1/2“ - G 1/8“	3000 l/min	1 - 10 bar	3 - 10 bar	0,67 kg