PN 510 701/PN 511 701/PN 510 121
PN 520 701/PN 520 121

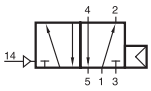

PN 510 701
PN 510 121

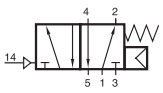

PN 511 701

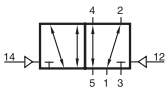

PN 520 701
PN 520 121



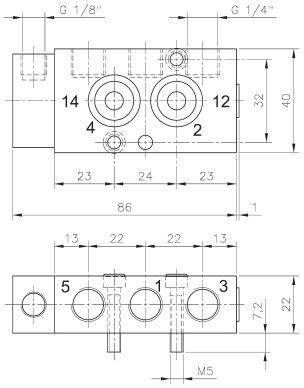

PN 510 701/PN 511 701

Pneumatically actuated 5/2-way spool valve. Interface according to NAMUR-standard.

PN 510 701 and PN 510 121 with pneumatic spring. For valves with pure pneumatic spring operating and actuation pressure should be at the same level. PN 511 701 with combined mechanical and pneumatic spring return. PN 520 with double pilot.

Port sizes type 701: 1, 3 and 5: G 1/4”
12 and 14: G 1/8”

Port sizes type 121: 1, 3 and 5: G 1/2”
12 and 14: G 1/8”

Delivery includes 1 pin, 2 screws, 2 O-rings.

NPT ported valves are available on request.

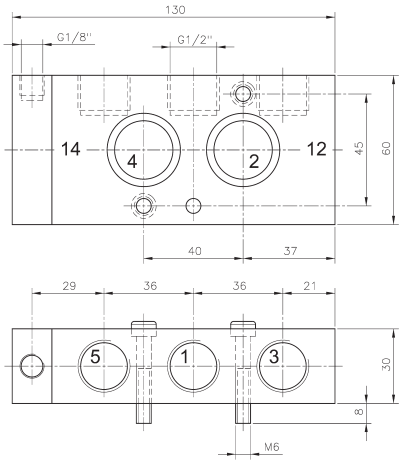

PN 510 121

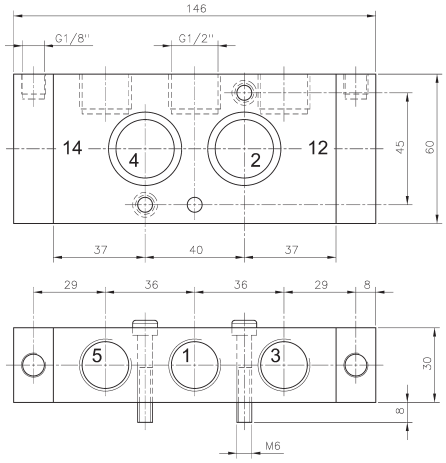

PN 520 121

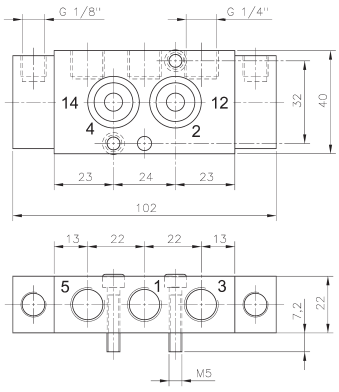

PN 520 701

Type	NAMUR Port size		Air flow	Operating press.	Actuating press.	Weight
PN 510 701	1/4”	G 1/4” - G 1/8”	1250 l/min	2 - 10 bar	the same	0,19 kg
PN 511 701	1/4”	G 1/4” - G 1/8”	1250 l/min	3 - 10 bar	3 - 10 bar	0,19 kg
PN 510 121	1/2”	G 1/2” - G 1/8”	3000 l/min	1 - 10 bar	the same	0,60 kg
PN 520 701	1/4”	G 1/4” - G 1/8”	1250 l/min	2 - 10 bar	2,5 - 10 bar	0,22 kg
PN 520 121	1/2”	G 1/2” - G 1/8”	3000 l/min	1 - 10 bar	2,5 - 10 bar	0,67 kg