

P 520 302
P 520 502

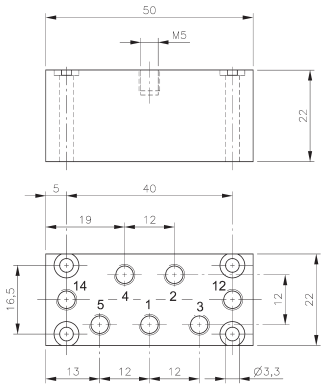

P 520 302

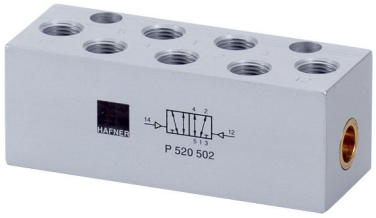

Pneumatically actuated 5/2-way spool valve actuated by impulse.

If signal is applied to 14 the valve is open from 1 to 4 and 2 to 3, 5 is closed.
If signal is applied to 12 the valve is open from 1 to 2 and 4 to 5.

Position is kept until next pneumatic signal is applied.

Exhaust can be throttled.

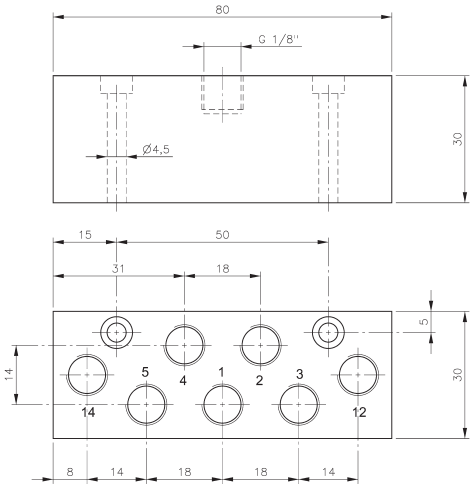

P 520 502

5/3-way centre closed version type P 531 302 available on request.

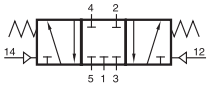

Type	Port size	Air flow	Operating press.	Actuating press.	Weight
P 520 302	M5	180 l/min	1 - 10 bar	2,5 - 10 bar	0,07 kg
P 520 502	G 1/8“	650 l/min	1 - 10 bar	2,5 - 10 bar	0,17 kg