

P 510 302
P 510 502

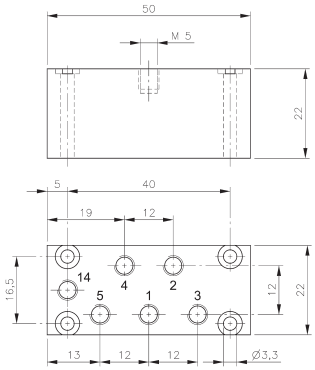

P 510 302

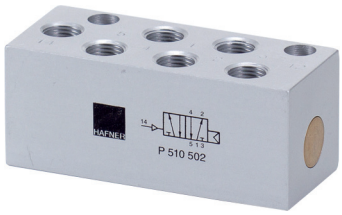

Pneumatically actuated 5/2-way spool valve actuated by permanent signal and equipped with air spring return.

Normally open from 1 to 2 and from 4 to 5.
If pressure is applied at 14 the valve is open from 1 to 4 and 2 to 3.

Operating pressure and actuating pressure should be at the same level.

Exhaust can be throttled.

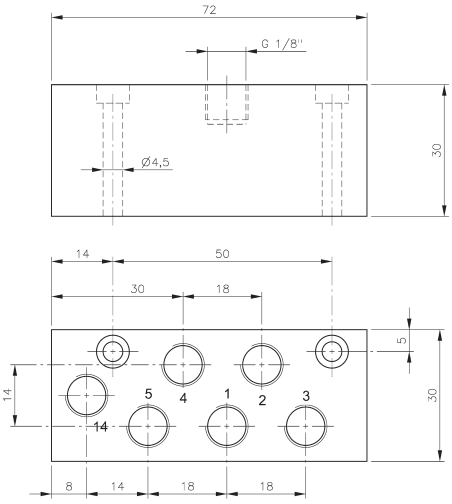

P 510 502

Type	Port size	Air flow	Operating press.	Actuating press.	Weight
P 510 302	M5	180 l/min	2 - 10 bar	the same	0,07 kg
P 510 502	G 1/8“	650 l/min	2 - 10 bar	the same	0,17 kg