P 320 302/P 320 502
P 322 302/P 322 502

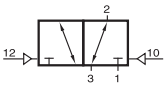

P 320 302
P 320 502

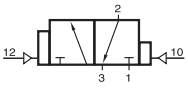

P 322 302
P 322 502



Pneumatically actuated 3/2-way spool valve actuated by impulse.

Type P 320 _ _ _ double pilot
Type P 322 _ _ _ double pilot dominating at port 12

If signal is applied to 12 the valve is open from 1 to 2 and 3 is blocked.
If signal is applied at 10 the valve is open from 2 to 3.

Position is kept until next pneumatic signal is applied.

Exhaust can be throttled.

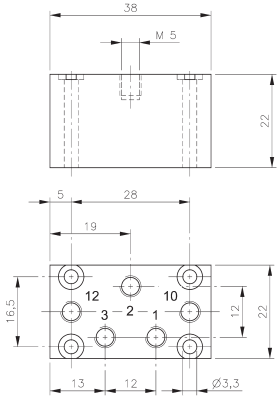

P 320 302/P 322 302

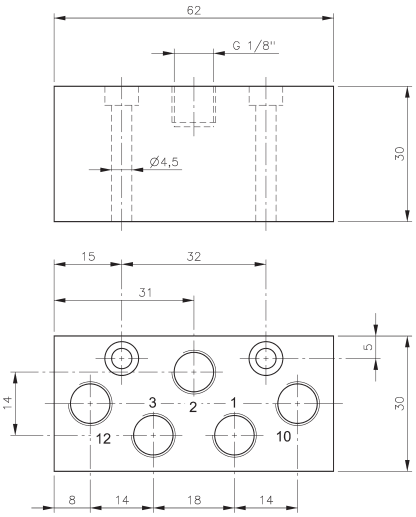

P 320 502/P 322 502

Type	Port size	Air flow	Operating press.	Actuating press.	Weight
P 320 302	M5	180 l/min	1 - 10 bar	2,5 - 10 bar	0,05 kg
P 320 502	G 1/8“	650 l/min	1 - 10 bar	2,5 - 10 bar	0,13 kg
P 322 302	M5	180 l/min	1 - 10 bar	2,5 - 10 bar	0,05 kg
P 322 502	G 1/8“	650 l/min	1 - 10 bar	2,5 - 10 bar	0,13 kg