P 310 304/P 311 304
P 320 304/P 322 304/RP 3 344

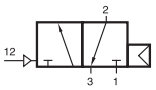

P 310 304

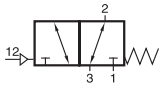

P 311 304

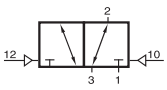

P 320 304

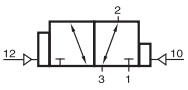

P 322 304



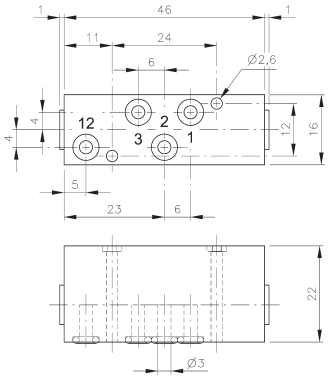

P 310 304/P 311 304

Pneumatically actuated 3/2-way spool valves.
To be assembled to plate RP 3 344.

Four different versions are offered:

P 310 304	valve with air-spring return
P 311 304	valve with mechanical spring return Pressure applied to port 1 = YES-function Pressure applied to port 3 = NOT-function
P 320 304	double pilot valve
P 322 304	double pilot valve dominating at port 12

For P 310 304 the operating and actuating pressure should be at the same level.

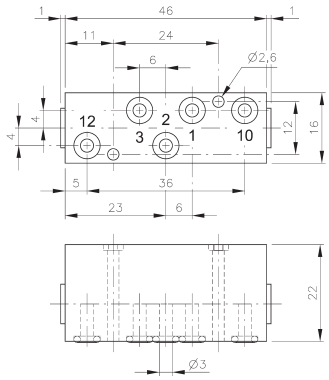

P 320 304/P 322 304

RP 3 344 is designed for carrying one 3/2-way valve type P 310 304, P 311 304, P 320 304 or P 322 304. The plate is equipped with 5 push-in fittings for 4 mm tube.

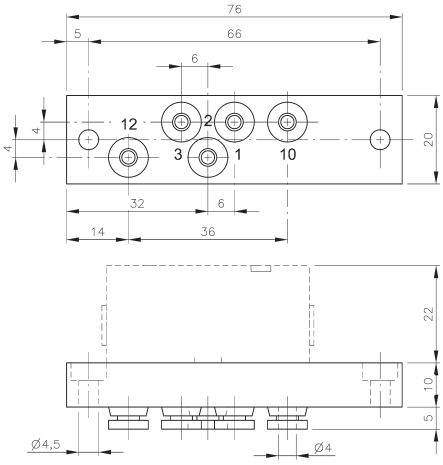

RP 3 344

Type	Port size	Air flow	Operating press.	Actuating press	Weight
P 310 304	Ø 3 mm	280 l/min	2 - 10 bar	the same	0,04 kg
P 311 304	Ø 3 mm	280 l/min	2 - 10 bar	3 - 10 bar	0,04 kg
P 320 304	Ø 3 mm	280 l/min	2 - 10 bar	2,5 - 10 bar	0,04 kg
P 322 304	Ø 3 mm	280 l/min	2 - 10 bar	2,5 - 10 bar	0,04 kg
RP 3 344	pif 4 mm				0,04 kg