AND 204/OR 204/YES 204 NOT 204/RP LG 204

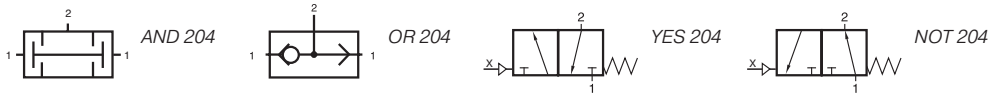

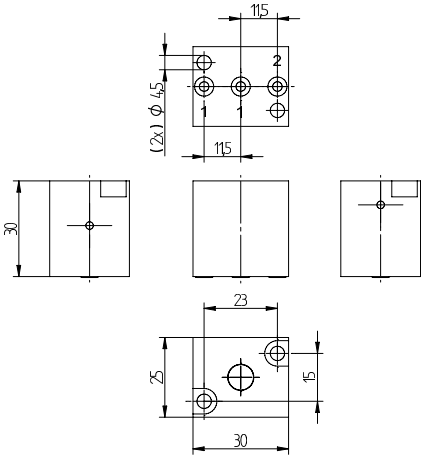

AND 204/OR 204

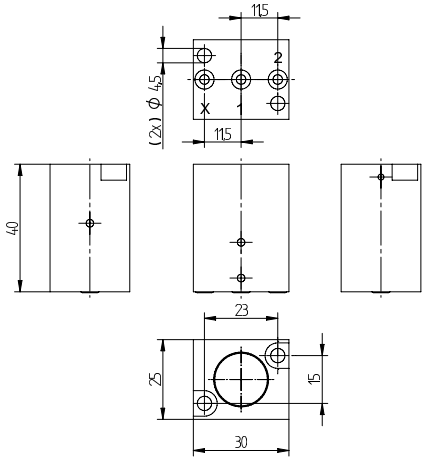

YES 204/NOT 204

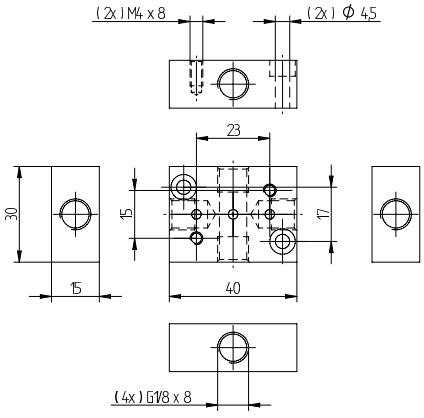

RP LG 204

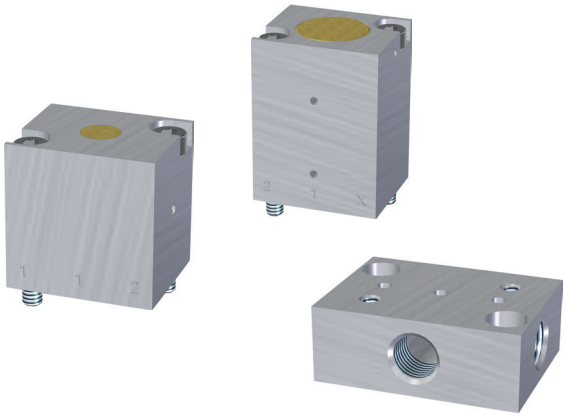

Logical elements with standardized interface used in commercial vehicle industries.

Elements can be mounted to subbase RP LG 204.

AND 204:	Gives output signal only when both input signals are present.
OR 204:	Gives output signal if either or both input signals are present.
YES 204:	The unit will give an output signal when there is an input signal present at port X.
NOT 204:	The unit gives an output signal when there is no input signal present at port X.
RP LG 204:	Subbase for logical elements series 204 with 4 x G 1/8” ports.

Delivery of logical elements includes 2 screws and 3 O-Rings.

Type	Function	Port size	Air flow	Operating press.	Actuating press.	Weight
AND 204	OR	Ø 2 mm	100 l/min	1 - 10 bar		0,06 kg
OR 204	AND	Ø 2 mm	100 l/min	1 - 10 bar		0,06 kg
YES 204	N.C.	Ø 2 mm	100 l/min	1 - 10 bar	1 - 10 bar	0,08 kg
NOT 204	N.O.	Ø 2 mm	100 l/min	1 - 10 bar	1 - 10 bar	0,08 kg
RP LG 204		G 1/8“				0,08 kg